SPECIFICATIONS FOR LCD MODULE

MODEL NO.
BC2002AFPHEH$
VER.01

FOR MESSRS:

_____

ON DATE OF:

_____

APPROVED BY:

_____

BOLYMIN, INC.
5F, No. 38, Keya Rd., Daya Dist., Central Taiwan Science Park, Taichung City, 42881, Taiwan.
Web Site:http://www.bolymin.com.tw TEL:+886-4-25658689 FAX:+886-4-25658698

History of Version

Version	Contents	Date	Note
01	NEW VERSION	2018/07/02	SPEC.

C O N T E N T S

1. Numbering System
2. Handling Precaution
3. General Specification
4. Absolute Maximum Rating
5. Electrical Characteristics
6. Optical Characteristics
7. Interface Pin Function
8. Power supply for LCD Module and LCD operating voltage adjustment
9. Backlight information
10. Quality Assurance
11. Reliability
12. Appendix (Drawing , ST7066U controller data)
    - 12-1 Drawing
    - 12-2 ST7066U controller data
        - 12-2.1 Function description
        - 12-2.2 C.G ROM table. table 2
        - 12-2.3 Instruction table
        - 12-2.4 Timing characteristics
        - 12-2.5 Initializing soft ware of LCM

1. Numbering System

B	C	2002	A	F	P	H	E	H	$
0	1	2	3	4	5	6	7	8	9

0	Brand	Bolymin	
1	Module Type	C= character type G= graphic type P= TAB/TCP type	O= COG type F= COF type L=PLED/OLED
2	Format	2002=20 characters, 2 lines 12232= 122 x 32 dots	
3	Version No.	A type	
4	LCD Color	G=STN/gray Y=STN/yellow-green PLED/yellow-green C=color STN,OLED/RGB	B=STN/blue,OLED/blue F=FSTN T=TN
5	LCD Type	R=positive/reflective P=positive/transflective	M=positive/transmissive N=negative/transmissive
6	Backlight type/color	L=LED array/ yellow-green H=LED edge/white R=LED array/red G=LED edge/yellow-green F=RGB array I=RGB edge Q=LED edge/red N=No backlight	D=LED edge/blue E=EL/white B=EL/blue C=CCFL/white Y=LED Bottom/yellow O=LED array/orange K=LED edge/green A=LED edge/amber
7	CGRAM Font (applied only on character type)	J=English/Japanese Font E=English/European Font G=Chinese(simple) F=Chinese(traditional)	C=English/Cyrillic Font H=English/Hebrew Font A=English/Arabic Font
8	View Angle/ Operating Temperature	B=Bottom/Normal Temperature H=Bottom/Wide Temperature U=Bottom/Ultra wide Temperature	T=Top/Normal Temperature W=Top/Wide Temperature C=9H/Normal Temperature E=Top/ultra wide temperature
9	Special Code	3=3.3 volt logic power supply n=negative voltage for LCD c=cable/connector xxx=to be assigned on datasheet	t=temperature compensation for LCD p=touch panel $=RoHS

2. Handling Precaution

2.1 Precaution in use of LCD Module

2.1.1. LCD panel is made of glass. Avoid excessive mechanical shock or applying strong pressure and/or sharp tools on the surface of display area.

2.1.2. The polarizer placed on the display surface is easily scratched and damaged. Extreme care should be taken when handling it. To clean dust or dirt off the display surface, wipe gently with cotton, or other soft material soaked with isopropyl alcohol, ethyl alcohol, do not use water, ketone or aromatics to clear display surface, and never scrub it hard.

2.1.3. Keep LCD panels away from direct sunlight. The storage environment should be dust-free, clean, dry, temperature is 25℃±10℃ and the humidity is below 55% RH.

2.1.4. Do not input any signal before power is turned on.

2.1.5. Avoid pressing on the metal bezel, otherwise the elastomer connector could be deformed and lose contact, resulting in missing pixels and also cause rainbow on the display.

2.1.6. It's important to control soldering temperature and time. RoHS compliant materials might need higher temperature and time, but try to keep temperature under 350℃ and time in 3-5 sec.

2.1.7. EL is manufactured from the organic film, and is easily affected by temperature, humidity and other environmental impact. Long time storage might cause low quality of the case. Therefore, please start production in 3 months after reception of the LCM. If in any case, long time storage over 3 months is necessary, please keep EL in vacuum package or at least in humidity < 35% RH, and temperature 25℃±10℃.

Note: 2.1.7. is applied to EL backlight only.

2.2 Static Electricity Precautions:

2.2.1. The LCD module contains a C-MOS LSI. People who operate the LCM should wear ESD protection equipment to prevent ESD hurt on products.

2.2.2. Do not touch any of the conductive parts such as the LSI pads; the copper leads on the PCB and the interface terminals with any parts of the human body.

2.2.3. Do not touch the connection terminals of the display with bare hand; it will cause disconnection or defective insulation of terminals.

2.2.4. The modules should be kept in anti-static bags or trays for storage.

2.2.5. Only properly grounded soldering irons should be used.

2.2.6. If an electric screwdriver is used, it should be grounded and shielded to prevent sparks.

2.2.7. The normal static prevention measures should be observed for work clothes and working benches.

2.2.8. Since dry air(almost low RH) is inductive to static, a humidity of 50-60% RH is recommended in assembly line.

2.3 Operation Precautions:

2.3.1. DC voltage applied on LCM causes electrochemical reactions, which will deteriorate the display over time. The applied pulse waveform should be a symmetric waveform such that no DC component remains. Be sure to use the specified operating voltage.

2.3.2. LCD driving voltage should be kept within specified range; excess voltage will shorten display life, while less voltage may not turn on LCM.

2.3.3. LCM response time will be extremely delayed in low operating temperature(such as -20℃) than in room operating temperature. Therefore, higher LCD driving voltage is required in low operating temperature; On the other hand, in high operating temperature (such as +70℃) LCD shows dark background color, therefore lower LCD driving voltage is required. Be sure to use the specified LCD driving voltage in different operating temperature.

2.4 Safety:

2.4.1 If the LCD panel breaks, be careful not to get the liquid crystal to touch your skin. If the liquid crystal touches your skin or clothes, please wash it off immediately by using soap and water.

2.5 WARRANTY POLICY

Bolymin .Will provide one-year warranty for the products only if under specification operating conditions.
If there are functional defects found during the period of warranty, the defective products would be replaced on a one-to-one basis.
Bolymin would not be responsible for any direct/indirect liabilities consequential to any parties.

2.6 MTBF

2.6.1 .By specific test condition, MTBF based on 30℃normal operation temperature is 50,000hours.

2.6.2 Test Condition:

2.6.2.1 Supply Voltage for LCM: Typical Vdd

2.6.2.2 CC (Constant Current) mode and typical current is applied for LED.

2.6.2.3 Run-Patterns: by Bolymin's test program that has defined patterns and cyclic period.

2.6.2.4 Humidity: 60%RH

2.6.3 Test Criteria:

Attenuation of average brightness: ≦ 50%

Increasing of current consumption for LCM/Backlight: ≦ 20%

Display function at room temperature: Normal

Appearance: Normal

3. General Specification

(1) Mechanical Dimension

Item	Dimension	Unit
Number of Characters	20characters x2 Lines	—
Module dimension (L x W x H)	116.0 x 37.0 x13.4	mm
View area	85.0 x 18.6	mm
Active area	73.5 x 11.5	mm
Dot size	0.60 x 0.65	mm
Dot pitch	0.65 x 0.70	mm
Character size (L x W)	5.55 x 3.2	mm
Character pitch (L x W)	5.95 x 3.7	mm

(2) Controller IC: **ST7066U (or Equivalent) controller**

4. Absolute Maximum Rating

4.1 Electrical Absolute Maximum Ratings (Vss=0V, Ta=25℃)

Item	Symbol	Min	Max	Unit
Supply Voltage (Logic)	Vdd-Vss	-0.3	7	V
Supply Voltage (LCD driver)	Vdd-Vo	Vdd -10.0	Vdd +0.3	V
Input Voltage	V_I	-0.3	Vdd+0.3	V

4.2 Environmental Absolute Maximum Ratings

Item	Symbol	Min	Max	Unit	Note
Operating Temperature	TOP	-20	70	℃	(1)
Storage Temperature	TST	-30	80	℃	(1)

Note (1)

(a) 90 %RH Max. (Ta <= 40 ºC).

(b) Wet-bulb temperature should be 39 ºC Max. (Ta > 40 ºC).

(c) No condensation.

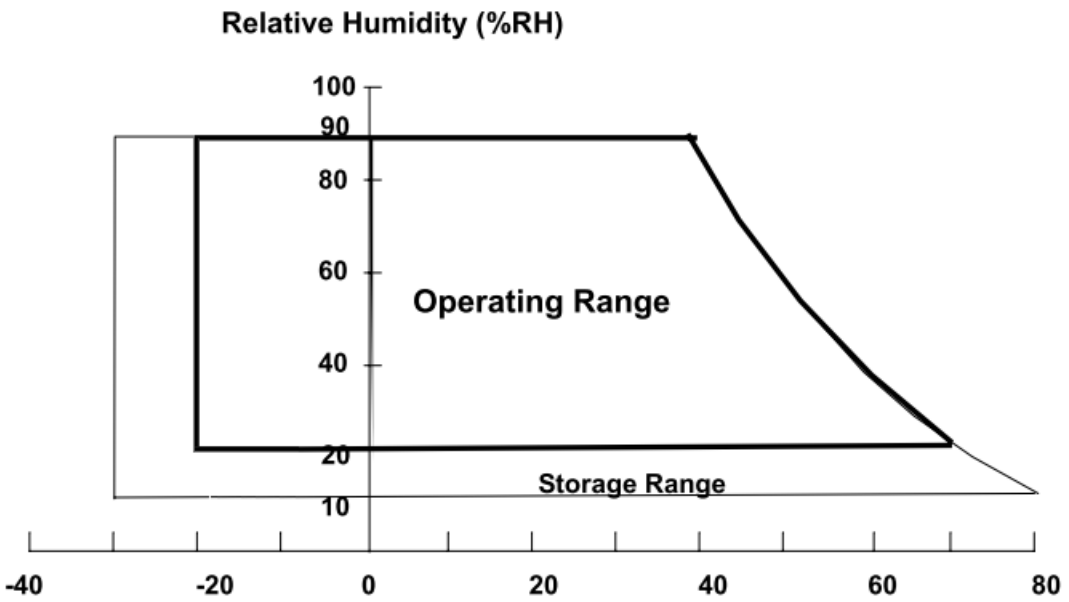

5. Electrical Characteristics

Item	Symbol	Condition	Min	Typ	Max	Unit
Supply Voltage For Logic	Vdd-Vss	-	4.75	-	5.25	V
Supply Voltage For LCD ＊Wide Temp、Type	Vdd-Vo	Ta=25℃	4.0	**4.3**	4.6	V
Input High Volt.	V_{IH}	-	0.7Vdd	-	Vdd	V
Input Low Volt.	V_{IL}	-	-0.3	-	0.6	V
Output High Volt.	V_{OH}	-	0.9 Vdd	-	Vdd	V
Output Low Volt.	V_{OL}	-	-	-	0.1 Vdd	V
Supply Current	Idd	Vdd=5V	-	1.6	-	mA
LCM Surface Luminance Ta=25℃	L	I_{LED}=30mA Display all ON	45	67	—	cd/m^2

※Optimum LCD driving voltage value, referring to above mentioned range, is changed due to different batch of LCD glass.

6. Optical Characteristics

a. FSTN

(Ta=25℃)

Item	Symbol	Min.	Typ.	Max.	Unit
View Angle (CR>=2)	θ_F	-	30	-	deg
	θ_B	-	45	-	deg
	φ_L	-	35	-	deg
	φ_R	-	35	-	deg
Contrast Ratio	CR	-	5	-	-
Response Time 25℃	T rise	-	200	400	ms
	T fall	-	250	400	ms

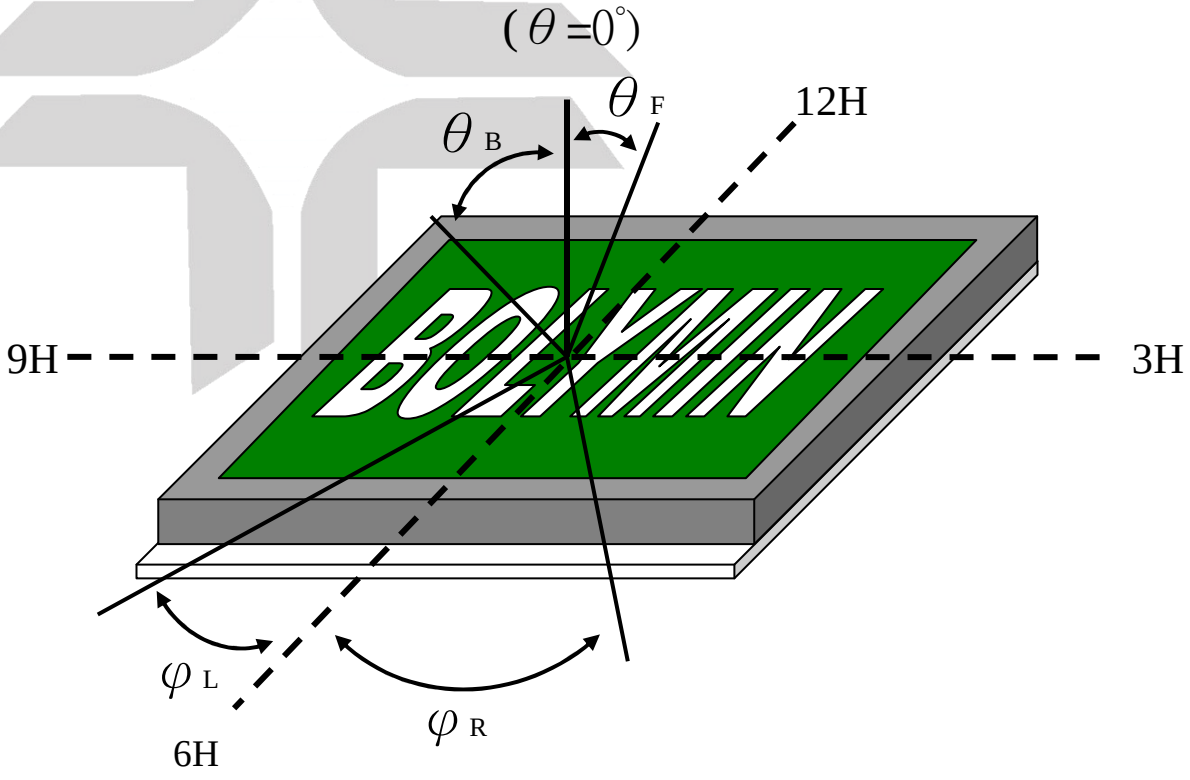

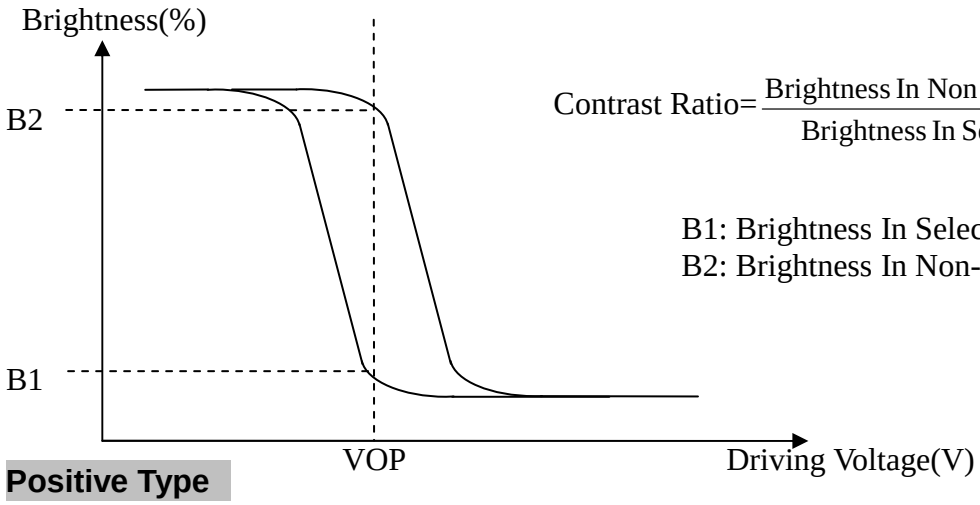

$$\text{Contrast Ratio} = \frac{\text{Brightness In Non - Select Signal}}{\text{Brightness In Select Signal}}$$

B1: Brightness In Select Signal
B2: Brightness In Non-Select Signal

Positive Type

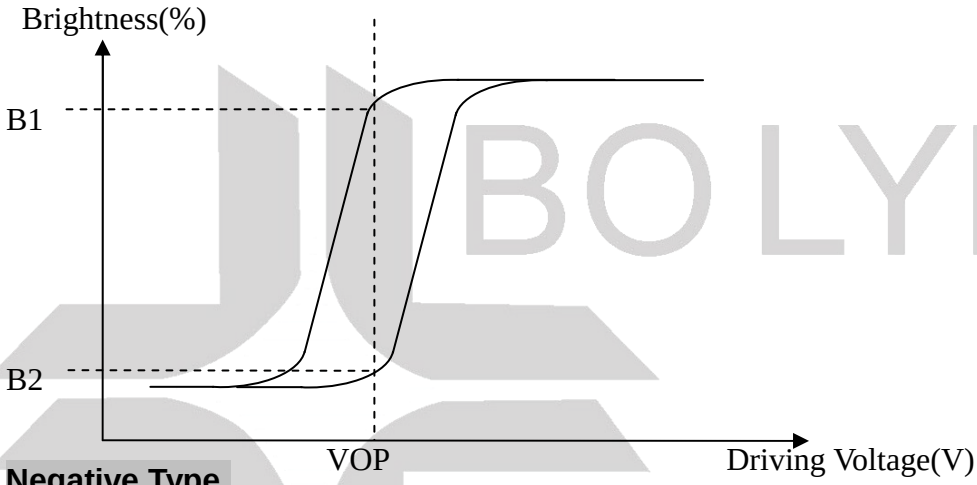

Negative Type

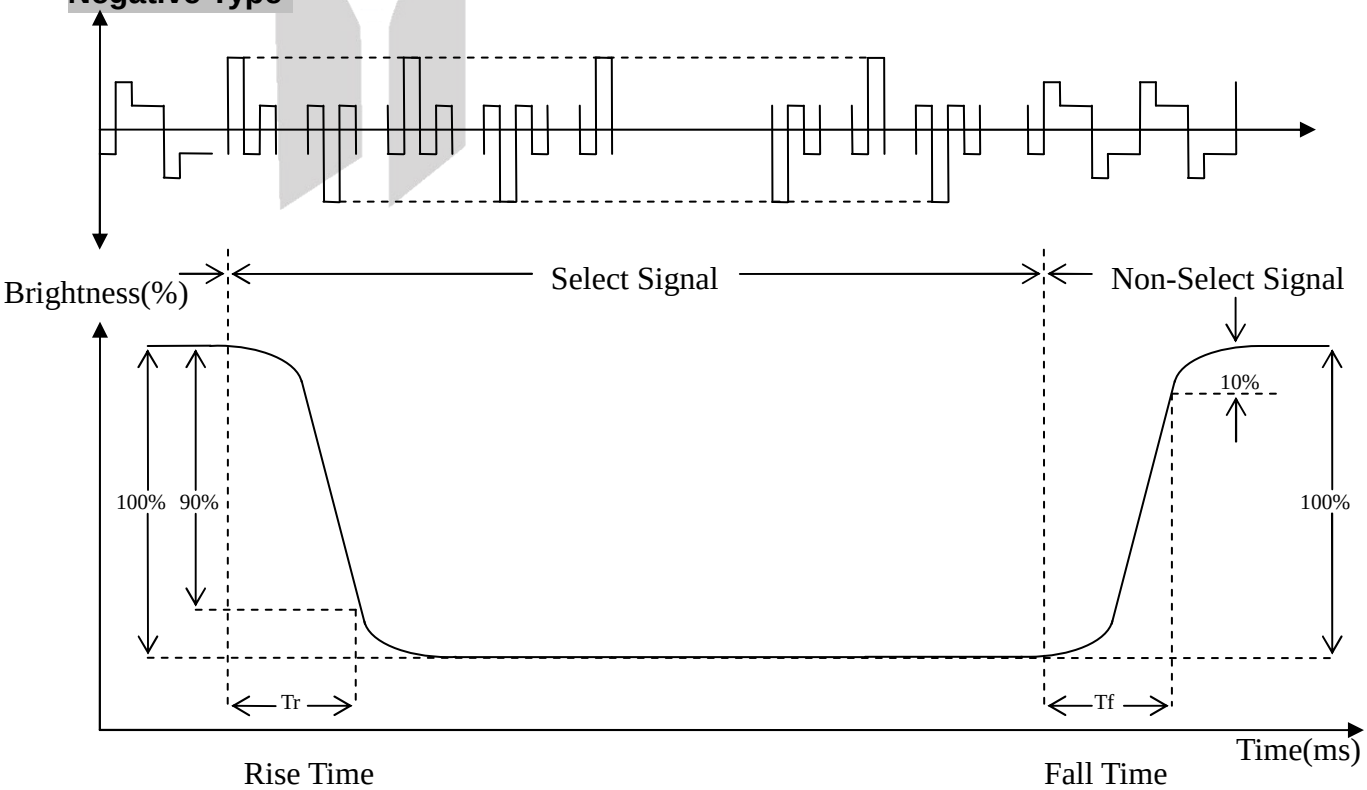

7. Interface Pin Function

Pin No.	Symbol	Level	Description
1	Vss	0V	Ground
2	Vdd	5.0V	Supply Voltage for logic
3	Vo	(Variable)	Operating voltage for LCD
4	RS	H/L	H:DATA, L:Instruction code
5	R/W	H/L	H:Read(MPU→Module) L:Write(MPU→Module)
6	E	H,H→L	Chip enable signal
7	DB0	H/L	Data bit 0
8	DB1	H/L	Data bit 1
9	DB2	H/L	Data bit 2
10	DB3	H/L	Data bit 3
11	DB4	H/L	Data bit 4
12	DB5	H/L	Data bit 5
13	DB6	H/L	Data bit 6
14	DB7	H/L	Data bit 7
15	A	-	Power supply for LED backlight (+)
16	K	-	Power supply for LED backlight (-)

8. Power supply for LCD Module and LCD operating voltage adjustment

Standard Type

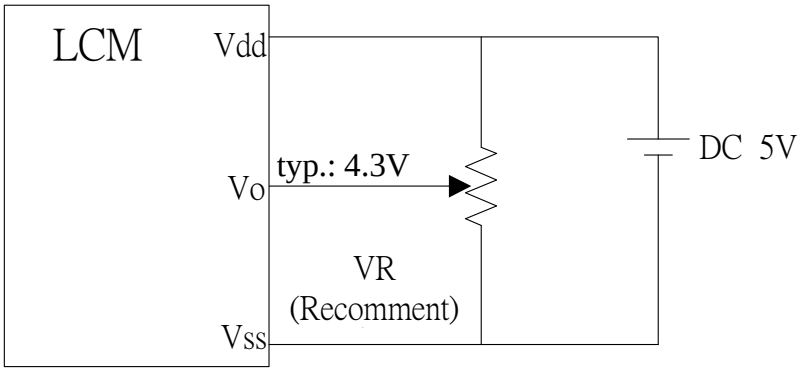

9. Backlight information

9.1 Specification

(1) LED edge/ white

Parameter	Symbol	Min	Typ	Max	Unit	Test Condition
Supply Current	ILED	—	30	—	mA	V=3.1V
Supply Voltage	V	2.9	3.1	3.3	V	ILED=30mA
Reverse Voltage	VR	—	—	5	V	
CIE	X	0.26	—	0.31		ILED=30mA
	Y	0.26	—	0.31		
Color	white					

9.2 Backlight driving methods

a. LED B/L drive from pin15 (LED+) pin16 (LED-)

a.1 edge/white

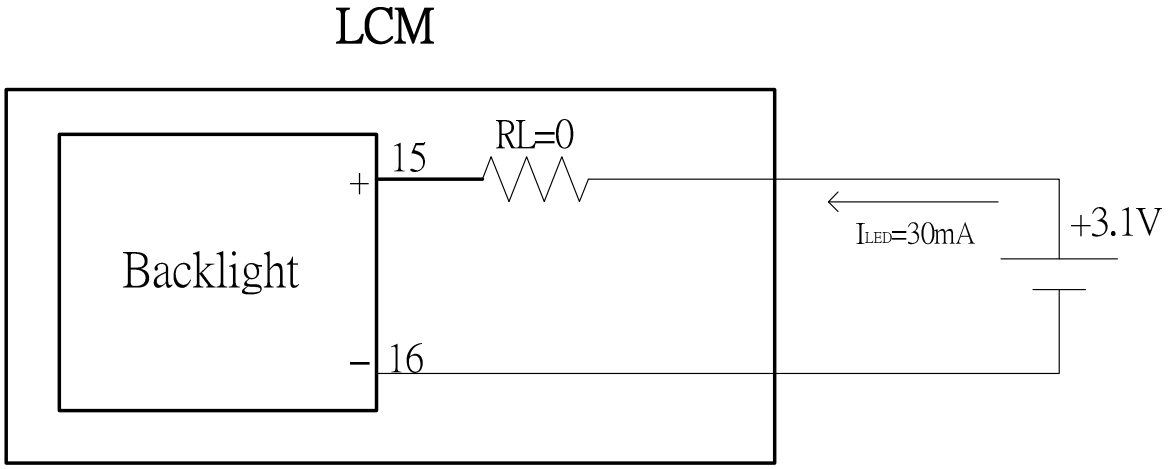

10. Quality Assurance

10.1 Inspection conditions

1. The LCD shall be inspected under 20~40W white fluorescent light.
2. Checking Direction shall be in the 40 degree from perpendicular line of specimen surface.
3. Checker shall see over 30 cm.
4. Inspect about 5 seconds for each side.
5. Defect that is located at outside of VA and doesn't affect function is ignored.

10.2 Inspection Parameters

<table>
<tr><th>NO.</th><th>Parameter</th><th>Criteria</th></tr>
<tr><td>1</td><td>Black or White spots (Particle)</td><td>
<table>
<tr><th>Zone / Dimension</th><th>Acceptable Number</th><th>Class Of Defects</th><th>Acceptable Level</th></tr>
<tr><td>D≦0.10</td><td>Disregard</td><td rowspan="4">Minor</td><td rowspan="4">2.5</td></tr>
<tr><td>0.10＜D≦0.2</td><td>4</td></tr>
<tr><td>0.2＜D≦0.3</td><td>2</td></tr>
<tr><td>0.3＜D</td><td>0</td></tr>
</table>
D=(Long + Short)/2
Total defects should not exceed 5/module
Defect that is located at outside of AA and doesn't affect function is ignored.
</td></tr>
<tr><td>2</td><td>Scratch, Substances</td><td>
<table>
<tr><th colspan="2">Zone</th><th rowspan="2">Acceptable Number</th><th rowspan="2">Class Of Defects</th><th rowspan="2">Acceptable Level</th></tr>
<tr><th>X(mm)</th><th>Y(mm)</th></tr>
<tr><td>—</td><td>0.05≧W</td><td>Disregard</td><td rowspan="4">Minor</td><td rowspan="4">2.5</td></tr>
<tr><td>4.0≧L</td><td>0.05≧W</td><td>4</td></tr>
<tr><td>3.0≧L</td><td>0.1≧W</td><td>2</td></tr>
<tr><td>—</td><td>0.1＜W</td><td>0</td></tr>
</table>
X: Length Y: Width
Total defects should not exceed 5/module
Defect that is located at outside of AA and doesn't affect function is ignored.
</td></tr>
</table>

<table>
<tr><td>3</td><td>Air Bubbles (between glass & polarizer)</td><td>
<table>
<tr><td>Zone / Dimension</td><td>Acceptable Number</td><td>Class Of Defects</td><td>Acceptable Level</td></tr>
<tr><td>D≦0.2</td><td>Disregard</td><td rowspan="3">Minor</td><td rowspan="3">2.5</td></tr>
<tr><td>0.2＜D≦0.5</td><td>3</td></tr>
<tr><td>0.5＜D</td><td>0</td></tr>
</table>
Total defects shall not excess 3/module.
Defect that is located at outside of AA and doesn’t affect function is ignored.
Bobble is sawn only under reflection light is disregarded.
</td></tr>
<tr><td>4</td><td>Displaying Pattern</td><td>
1. Incomplete or broken line is not allowed.
2. Pinholes
<table>
<tr><td>Dimension Φ(mm)</td><td>Criteria</td><td>Class Of Defects</td><td>Acceptable Level</td></tr>
<tr><td>Φ＜0.1</td><td>Disregard</td><td rowspan="3">Minor</td><td rowspan="3">2.5</td></tr>
<tr><td>0.1＜Φ≦0.2</td><td>2</td></tr>
<tr><td>0.2＜Φ≦0.25</td><td>1</td></tr>
<tr><td>0.25＜Φ</td><td>0</td></tr>
</table>
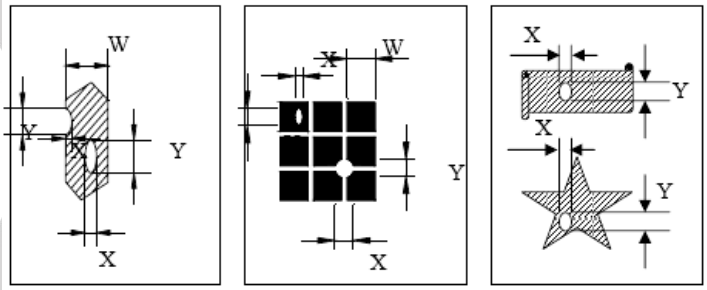

Ø＝(X+Y)/2
3. Deformation
<table>
<tr><td>Dimension Φ(mm)</td><td>Criteria</td><td>Class Of Defects</td><td>Acceptable Level</td></tr>
<tr><td>Φ＜0.15</td><td>Disregard</td><td rowspan="3">Minor</td><td rowspan="3">2.5</td></tr>
<tr><td>Φ≦0.25 and X≦1/2D</td><td>3</td></tr>
<tr><td>Φ＞0.25and X＞1/2D</td><td>0</td></tr>
</table>
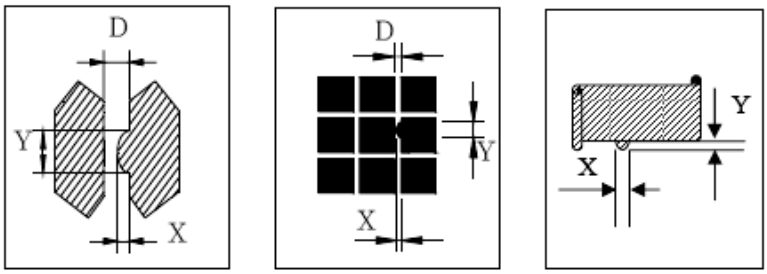

D：間距　　Ø=(X+Y)/2
</td></tr>
</table>

Other Inspection standard reference Bolymin standard.

11. Reliability

■Content of Reliability Test

Environmental Test				
No	Test Item	Content of Test	Test Condition	Applicable Standard
1	High Temperature storage	Endurance test applying the high storage temperature for a long time.	80℃ 96 hrs	——
2	Low Temperature storage	Endurance test applying the high storage temperature for a long time.	-30℃ 96 hrs	——
3	High Temperature Operation	Endurance test applying the electric stress (Voltage & Current) and the thermal stress to the element for a long time.	70℃ 96 hrs	——
4	Low Temperature Operation	Endurance test applying the electric stress under low temperature for a long time.	-20℃ 96 hrs	——
5	Humidity Test	Endurance test applying the high humidity storage for a long time.	40℃,90%RH 96hrs	——
6	Temperature cycle (Non-operation)	Endurance test applying the low and high temperature cycle. -30℃ 80℃ 30min 30min 1 cycle	-30℃/80℃ 10 cycles	——
7	Vibration test	Endurance test applying the vibration during transportation and using.	Total Fixed Amplitude:1.5mm Vibration Frequency :10~55Hz One cycle 60 seconds to 3 direction of X,Y,Z for each 15minutes	——

※Assess after placing at normal temperature and humidity for 4 hour。No abnormalities in functions and appearance。

12. Appendix (Drawing, ST7066U controller data)

12-1 Drawing

PIN	SYMBOL
1	VSS
2	VDD
3	V0
4	RS
5	R/W
6	E
7	D0
8	D1
9	D2
10	D3
11	D4
12	D5
13	D6
14	D7
15	A
16	K

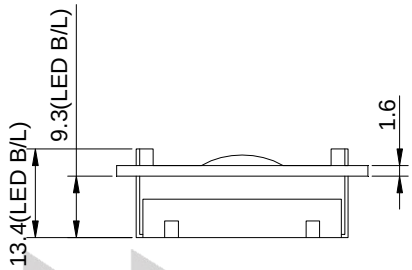

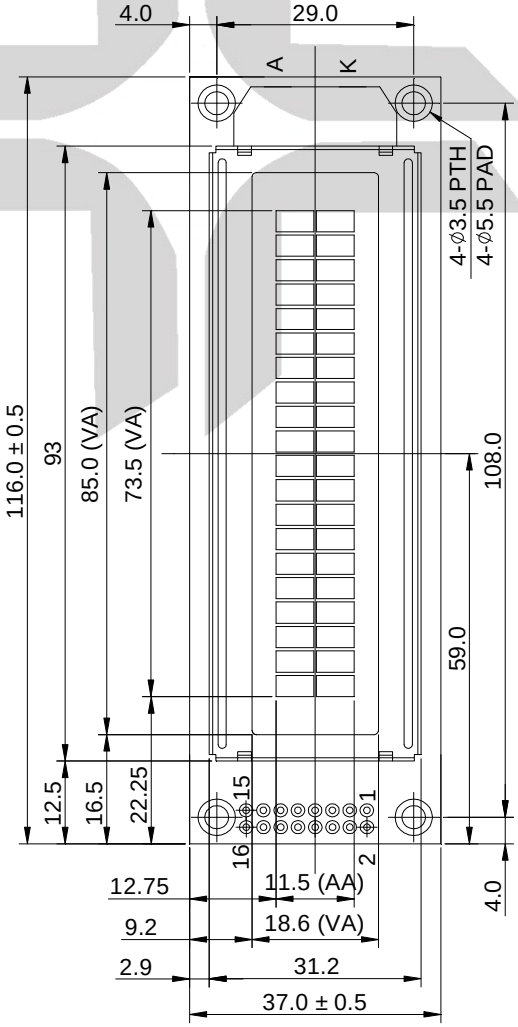

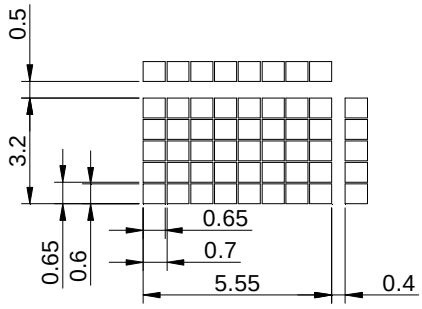

DOT SIZE
SCALE 5/1

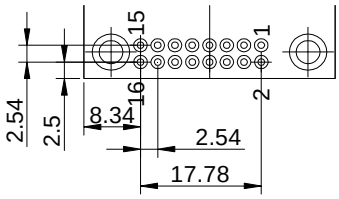

The non-specified tolerance of dimension is ±0.3 mm .

SCALE: 1/1	REV: 0	寶麗明股份有限公司 BOLYMIN,INC.	
UNIT: mm	PAGE: 1/1	MODEL BC2002A	
APPROVE		TITLE LCM DRAWING	
CHECK			
DRAW	Dean 2015.12.25	DWG NO.	

12-2 ST7066U controller data

12.2.1 Function description

The LCD display Module is built in a LSI controller, the controller has two 8-bit registers, an instruction register (IR) and a data register (DR).

The IR stores instruction codes, such as display clear and cursor shift, and address information for display data RAM (DDRAM) and character generator (CGRAM). The IR can only be written from the MPU. The DR temporarily stores data to be written or read from DDRAM or CGRAM. When address information is written into the IR, then data is stored into the DR from DDRAM or CGRAM. By the register selector (RS) signal, these two registers can be selected.

RS	R/W	Operation
0	0	IR write as an internal operation (display clear, etc.)
0	1	Read busy flag (DB7) and address counter (DB0 to DB7)
1	0	Write data to DDRAM or CGRAM (DR to DDRAM or CGRAM)
1	1	Read data from DDRAM or CGRAM (DDRAM or CGRAM to DR)

Busy Flag (BF)

When the busy flag is 1, the controller LSI is in the internal operation mode, and the next instruction will not be accepted. When RS=0 and R/W=1, the busy flag is output to DB7. The next instruction must be written after ensuring that the busy flag is 0.

Address Counter (AC)

The address counter (AC) assigns addresses to both DDRAM and CGRAM

Display Data RAM (DDRAM)

This DDRAM is used to store the display data represented in 8-bit character codes. Its extended capacity is 80×8 bits or 80 characters. Below figure is the relationship between DDRAM addresses and positions on the liquid crystal display.

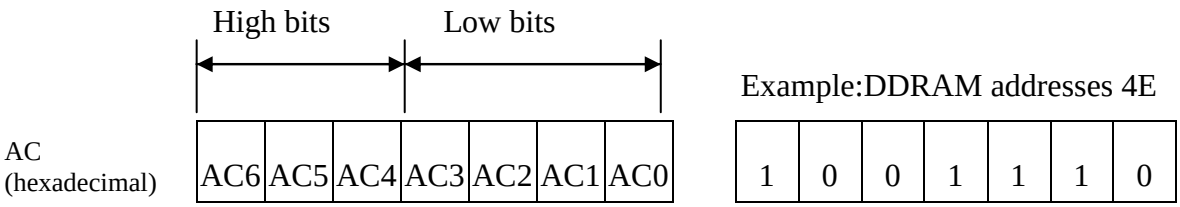

DDRAM Address

Display position DDRAM address

1	2	3	4	5	6	7	8	9	10	11	12	13	14	15	16	17	18	19	20
00	01	02	03	04	05	06	07	08	09	0A	0B	0C	0D	0E	0F	10	11	12	13
40	41	42	43	44	45	46	47	48	49	4A	4B	4C	4D	4E	4F	50	51	52	53

Example: 2-Line by 20-Character Display

Character Generator ROM (CGROM)

The CGROM generate 5×8 dot or 5×10 dot character patterns from 8-bit character codes. See Table 2.

Character Generator RAM (CGRAM)

In CGRAM, the user can rewrite character by program. For 5×8 dots, eight character patterns can be written, and for 5×10 dots, four character patterns can be written.

Write into DDRAM the character code at the addresses shown as the left column of table 1. To show the character patterns stored in CGRAM.

BOLYMIN

Relationship between CGRAM Addresses, Character Codes (DDRAM) and Character Patterns (CGRAM Data)

For 5 * 8 dot character patterns

Character Codes (DDRAM data)	CGRAM Address		Character Patterns (CGRAM data)	
7 6 5 4 3 2 1 0 High Low	5 4 3 2 1 0 High Low		7 6 5 4 3 2 1 0 High Low	
0 0 0 0 * 0 0 0	0 0 0	0 0 0	* * * ■ ■ ■ ■ 0	Character pattern(1)
		0 0 1	* * * ■ 0 0 0 ■	
		0 1 0	* * * ■ 0 0 0 ■	
		0 1 1	* * * ■ ■ ■ ■ 0	
		1 0 0	* * * ■ 0 ■ 0 0	
		1 0 1	* * * ■ 0 0 ■ 0	
		1 1 0	* * * ■ 0 0 0 ■	Cursor pattern
		1 1 1	* * * 0 0 0 0 0	
0 0 0 0 * 0 0 1	0 0 1	0 0 0	* * * ■ 0 0 0 ■	Character pattern(2)
		0 0 1	* * * 0 ■ 0 ■ 0	
		0 1 0	* * * ■ ■ ■ ■ ■	
		0 1 1	* * * 0 0 ■ 0 0	
		1 0 0	* * * ■ ■ ■ ■ ■	
		1 0 1	* * * 0 0 ■ 0 0	
		1 1 0	* * * 0 0 ■ 0 0	
		1 1 1	* * * 0 0 0 0 0	Cursor pattern
		0 0 0	* * *	
		0 0 1		
0 0 0 0 * 1 1 1	1 1 1	1 0 0		
		1 0 1		
		1 1 0		
		1 1 1	* * *	

For 5 * 10 dot character patterns

Character Codes (DDRAM data)	CGRAM Address		Character Patterns (CGRAM data)	
7 6 5 4 3 2 1 0 High Low	5 4 3 2 1 0 High Low		7 6 5 4 3 2 1 0 High Low	
0 0 0 0 * 0 0 0	0 0	0 0 0 0	* * * 0 0 0 0 0	Character pattern
		0 0 0 1	* * * 0 0 0 0 0	
		0 0 1 0	* * * ■ 0 ■ ■ 0	
		0 0 1 1	* * * ■ ■ 0 0 ■	
		0 1 0 0	* * * ■ 0 0 0 ■	
		0 1 0 1	* * * ■ 0 0 0 ■	
		0 1 1 0	* * * ■ ■ ■ ■ 0	
		0 1 1 1	* * * ■ 0 0 0 0	
		1 0 0 0	* * * ■ 0 0 0 0	
		1 0 0 1	* * * ■ 0 0 0 0	
		1 0 1 0	* * * 0 0 0 0 0	Cursor pattern
		1 1 1 1	* * * * * * * *	

■ : " High "

12.2.2 C.G ROM table. table 2

Code E: English –European Font

Upper 4 bit / Lower 4 bit	LLLL	LLLH	LLHL	LLHH	LHLL	LHLH	LHHL	LHHH	HLLL	HLLH	HLHL	HLHH	HHLL	HHLH	HHHL	HHHH
LLLL	CG RAM (1)															
LLLH	CG RAM (2)															
LLHL	CG RAM (3)															
LLHH	CG RAM (4)															
LHLL	CG RAM (5)															
LHLH	CG RAM (6)															
LHHL	CG RAM (7)															
LHHH	CG RAM (8)															
HLLL	CG RAM (1)															
HLLH	CG RAM (2)															
HLHL	CG RAM (3)															
HLHH	CG RAM (4)															
HHLL	CG RAM (5)															
HHLH	CG RAM (6)															
HHHL	CG RAM (7)															
HHHH	CG RAM (8)															

12.2.3 Instruction table

Instruction	Instruction Code										Description	Execution time (fosc=270Khz)
	RS	R/W	DB7	DB6	DB5	DB4	DB3	DB2	DB1	DB0		
Clear Display	0	0	0	0	0	0	0	0	0	1	Write “00H” to DDRAM and set DDRAM address to “00H” from AC	1.52ms
Return Home	0	0	0	0	0	0	0	0	1	—	Set DDRAM address to “00H” from AC and return cursor to its original position if shifted. The contents of DDRAM are not changed.	1.52ms
Entry Mode Set	0	0	0	0	0	0	0	1	I/D	SH	Assign cursor moving direction and enable the shift of entire display.	37 μs
Display ON/OFF Control	0	0	0	0	0	0	1	D	C	B	Set display (D), cursor (C), and blinking of cursor (B) on/off control bit.	37 μs
Cursor or Display Shift	0	0	0	0	0	1	S/C	R/L	—	—	Set cursor moving and display shift control bit, and the direction, without changing of DDRAM data.	37 μs
Function Set	0	0	0	0	1	DL	N	F	—	—	Set interface data length (DL:8-bit/4-bit), numbers of display line (N:2-line/1-line)and, display font type (F:5×11 dots/5×8 dots)	37 μs
Set CGRAM Address	0	0	0	1	AC5	AC4	AC3	AC2	AC1	AC0	Set CGRAM address in address counter.	37 μs
Set DDRAM Address	0	0	1	AC6	AC5	AC4	AC3	AC2	AC1	AC0	Set DDRAM address in address counter.	37 μs
Read Busy Flag and Address	0	1	BF	AC6	AC5	AC4	AC3	AC2	AC1	AC0	Whether during internal operation or not can be known by reading BF. The contents of address counter can also be read.	0 μs
Write Data to RAM	1	0	D7	D6	D5	D4	D3	D2	D1	D0	Write data into internal RAM (DDRAM/CGRAM).	37 μs
Read Data from RAM	1	1	D7	D6	D5	D4	D3	D2	D1	D0	Read data from internal RAM (DDRAM/CGRAM).	37 μs

12.2.4 Timing characteristics

12.2.4.1 Write Operation

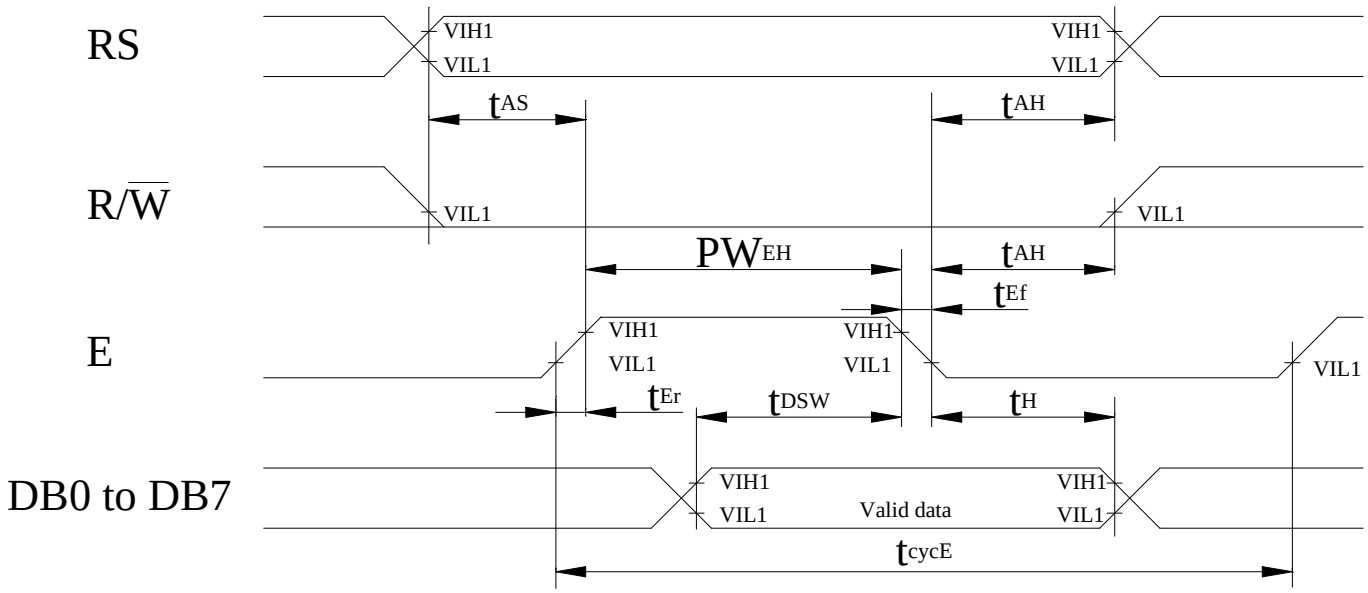

Ta=25℃,Vdd=5.0±0.5V

Item	Symbol	Min	Typ	Max	Unit
Enable cycle time	t_{cycE}	1200	-	-	ns
Enable pulse width (high level)	PW_{EH}	140	-	-	ns
Enable rise/fall time	t_{Er},t_{Ef}	-	-	25	ns
Address set-up time (RS, R/W to E)	t_{AS}	0	-	-	ns
Address hold time	t_{AH}	10	-	-	ns
Data set-up time	t_{DSW}	40	-	-	ns
Data hold time	t_H	10	-	-	ns

12.2.4.2 Read Operation

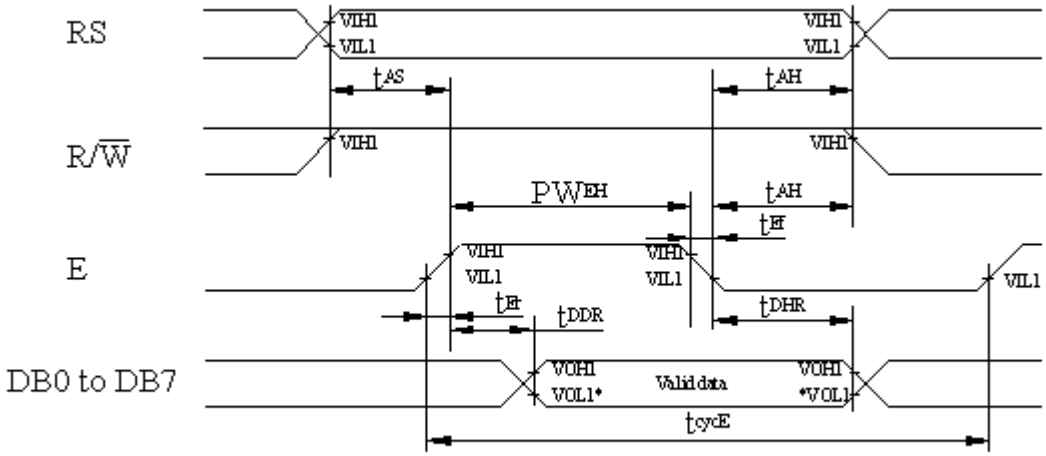

Ta=25℃,Vdd=5.0±0.5V

Item	Symbol	Min	Typ	Max	Unit
Enable cycle time	t_{cycE}	1200	-	-	ns
Enable pulse width (high level)	PW_{EH}	140	-	-	ns
Enable rise/fall time	t_{Er},t_{Ef}	-	-	25	ns
Address set-up time (RS, R/W to E)	t_{AS}	0	-	-	ns
Address hold time	t_{AH}	10	-	-	ns
Data delay time	t_{DDR}	-	-	100	ns
Data hold time	t_{DHR}	10	-	-	ns

12-2.5 Initializing soft ware of LCM

12.2.5.1 8-bit interface

POWER ON

Wait time >40mS
After Vcc >4.5V

Function set

RS	R/W	DB7	DB6	DB5	DB4	DB3	DB2	DB1	DB0
0	0	0	0	1	1	N	F	X	X

BF cannot be checked before this instruction.

Wait time >37uS

Function set

RS	R/W	DB7	DB6	DB5	DB4	DB3	DB2	DB1	DB0
0	0	0	0	1	1	N	F	X	X

BF cannot be checked before this instruction.

Wait time >37uS

Display ON/OFF control

RS	R/W	DB7	DB6	DB5	DB4	DB3	DB2	DB1	DB0
0	0	0	0	0	0	1	D	C	B

Wait time >37uS

Display clear

RS	R/W	DB7	DB6	DB5	DB4	DB3	DB2	DB1	DB0
0	0	0	0	0	0	0	0	0	1

Wait time >1.52mS

Entry mode set

RS	R/W	DB7	DB6	DB5	DB4	DB3	DB2	DB1	DB0
0	0	0	0	0	0	0	1	I/D	S

Initialization end

12.2.5.2 4-bit interface

POWER ON

Wait time >40mS
After Vcc >4.5V

Function set

RS	R/W	DB7	DB6	DB5	DB4	DB3	DB2	DB1	DB0
0	0	0	0	1	1	X	X	X	X

BF cannot be checked before this instruction.

Wait time >37uS

Function set

RS	R/W	DB7	DB6	DB5	DB4	DB3	DB2	DB1	DB0
0	0	0	0	1	0	X	X	X	X
0	0	N	F	X	X	X	X	X	X

BF cannot be checked before this instruction.

Wait time >37uS

Function set

RS	R/W	DB7	DB6	DB5	DB4	DB3	DB2	DB1	DB0
0	0	0	0	1	0	X	X	X	X
0	0	N	F	X	X	X	X	X	X

BF cannot be checked before this instruction.

Wait time >37uS

Display ON/OFF control

RS	R/W	DB7	DB6	DB5	DB4	DB3	DB2	DB1	DB0
0	0	0	0	0	0	X	X	X	X
0	0	1	D	C	B	X	X	X	X

Wait time >37uS

Display clear

RS	R/W	DB7	DB6	DB5	DB4	DB3	DB2	DB1	DB0
0	0	0	0	0	0	X	X	X	X
0	0	0	0	0	1	X	X	X	X

Wait time >1.52mS

Entry mode set

RS	R/W	DB7	DB6	DB5	DB4	DB3	DB2	DB1	DB0
0	0	0	0	0	0	X	X	X	X
0	0	0	1	I/D	S	X	X	X	X

Initialization end